E60 Pro A - Service Manual

Catalog:

I. Exploded Diagram of the Machine

II. Electrical Schematic and Electrical Components Overview

III. Common Troubleshooting and Fault Code Solutions

IV. Replacement and Repair of Machine Spare Parts

V. Warranty Policy and Routine Maintenance

I. Exploded Diagram of the Machine

Heruntergeladen von Gast (IP 216.73.217.22) am 19.10.2026 um 02:25 Uhr · sana.swiss

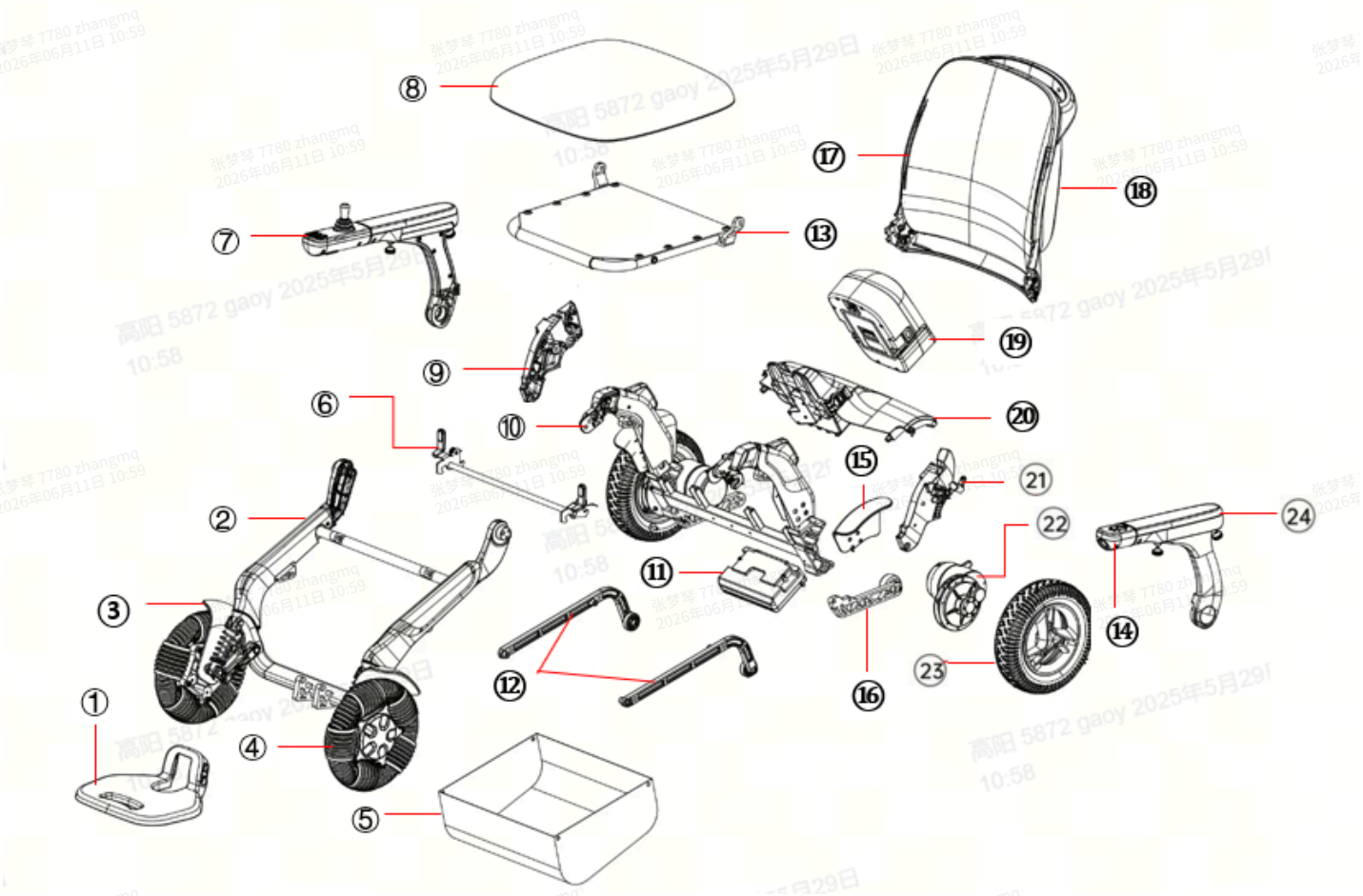

1. Foot Pedal	2. Front Bracket	3. Front Fender	4. Omnidirectional Wheel	5. Storage Basket	6
7. Upper Controller	8. Seat Cushion	9. Right Backrest Die Casting	10. Rear Bracket	11. Lower Controller	1 A
13. Seat Frame	14. Armrest Light	15. Rear Fender	16. Anti-Tip Wheel	17. Backrest Assembly	1
19. Battery	20. Rear Housing	21. Left Backrest Die Casting	22. Motor	23. Rear Wheel	2 A

II. Electrical Schematic and Electrical Components Overview

2.1 Electrical Schematic

Heruntergeladen von Gast (IP 216.73.217.22) am 19.10.2026 um 02:25 Uhr · sana.swiss

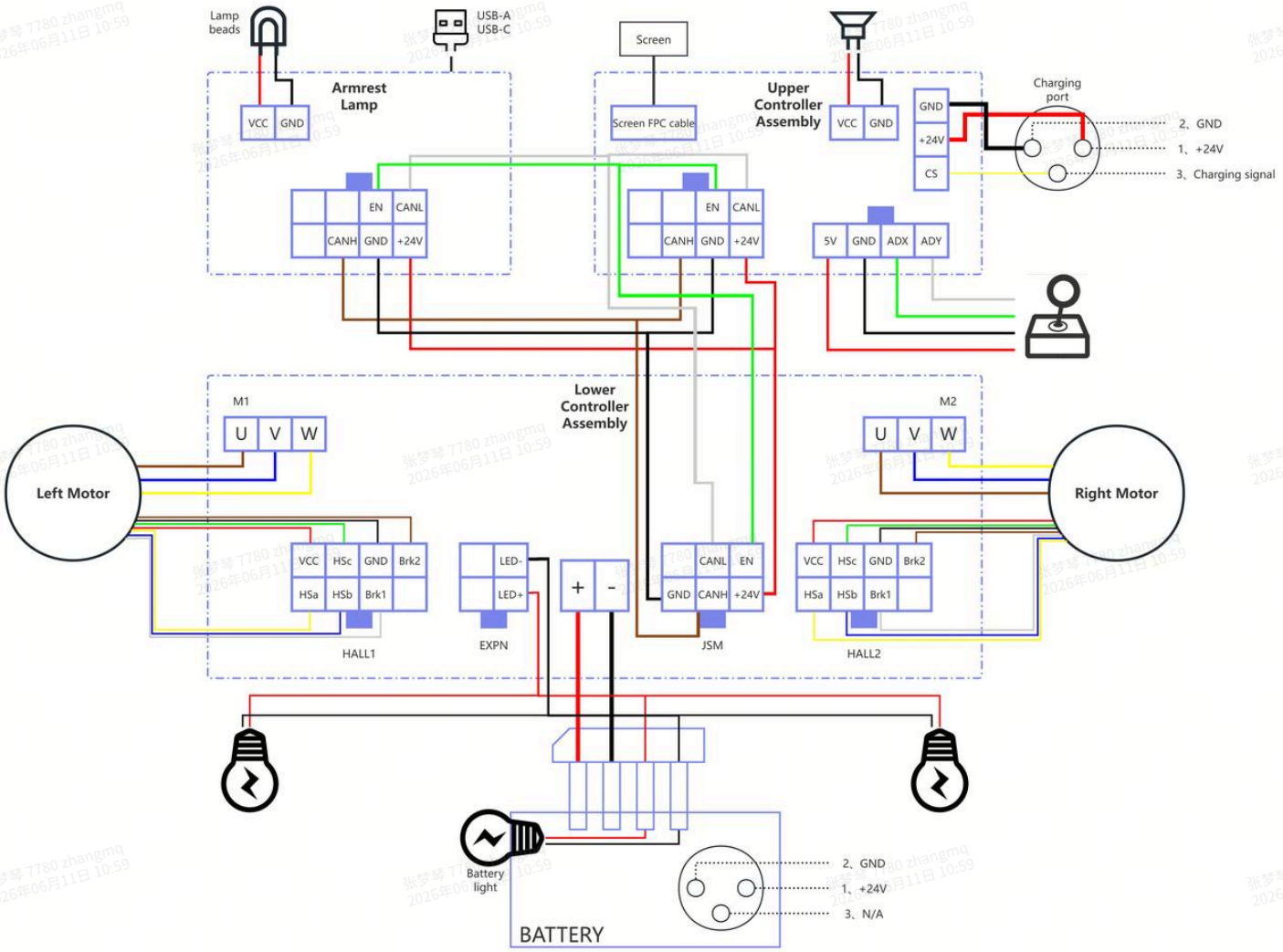

2.2 Electrical Components Overview

2.2.1 Upper and Lower Controller Connection Cable

Figure (1)

- Installation Position: inside the armrest and rear bracket tube (see Figure (2) ①)
- Function: enables communication between the upper and lower controller and supplies power to the upper controller
- Fault: wiring disconnection or terminal loosening.
- Repairment: replace the upper and lower controller connection cable
- Cable Connection Description:

Heruntergeladen von Gast (IP 216.73.217.22) am 19.10.2026 um 02:25 Uhr · sana.swiss

a. Figure (1) ①: connected to the upper controller and armrest light
b. Figure (1) ② : connected to the lower controller JSM port (see Figure (4) ⑦)

Figure (2)

2.2.2 Lower Controller and Battery Connection Cable

- Installation Position: bottom of the rear housing
- Function: supplies power to the machine and the battery indicator light
- Fault: wiring disconnection, terminal oxidation, or fuse blown
- Repairment: replace the lower controller and battery connection cable
- Cable Connection Description:
  a. Figure (3) ①: installed in the rear housing to connect battery
  b. Figure (3) ②: connected to the lower controller EXPN port (see Figure (4) ⑤)
  c. Figure (3) +/- : connected to the lower controller +/- terminals (see Figure (4) ⑥)

Figure (3)

2.2.3 Lower Controller

- Installation Position: rear bracket beam, bottom of the rear housing

Heruntergeladen von Gast (IP 216.73.217.22) am 19.10.2026 um 02:25 Uhr · sana.swiss

- Function: executes transmission and drive instructions from the upper controller and supplies power to the machine
- Fault: communication failure, short circuit
- Repairment: replace the lower controller
- Cable Connection Description:
  a. Figure (4) ① and ②: motor phase wire terminals; ① is for the left motor (U/V/W), and ② is for the right motor (U/V/W) (see Figure (6))
  b. Figure (4) ③ and ④: motor Hall sensor terminals; ③ is for the left motor (HALL1), and ④ is for the right motor (HALL2) (see Figure (6))
  c. Figure (4) ⑤: battery indicator light cable terminal (see Figure (3) ②)
  d. Figure (4) ⑥: battery lower controller connection cable terminals (+/-) (see Figure (3) +/-)
  e. Figure (4) ⑦: the upper and lower controller connection cable terminal (see Figure (2) ①)

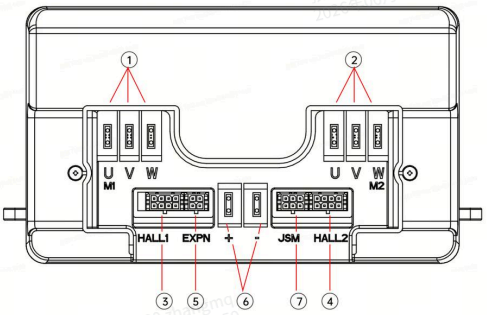

Figure (4)

2.2.4 Upper Controller

- Installation Position: front end of the right or left armrest
- Function: Bluetooth connection, function display, transmission of machine control instructions, and battery charging
- Fault: communication failure, short circuit
- Repairment: replace the upper controller
- Cable Connection Description:

Heruntergeladen von Gast (IP 216.73.217.22) am 19.10.2026 um 02:25 Uhr · sana.swiss

a. Figure (5) ①: connection port for the LCD display cable
b. Figure (5) ②: connection port for the joystick communication cable
c. Figure (5) ③: charging port for the upper controller cable
d. Figure (5) ④: connection port for the speaker cable
e. Figure (5) ⑤: connection port for the upper and lower controller cable (see Figure (2) ①)

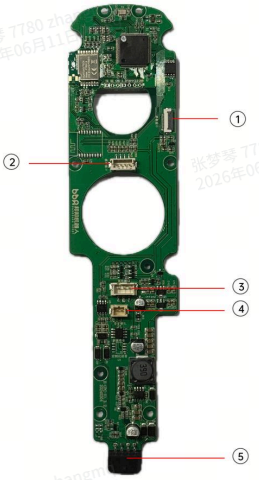

Figure (5)

2.2.5 Motor

- Installation Position: left and right sides of the rear bracket bottom
- Function: drives the machine and provides braking
- Fault: abnormal noise, phase loss, Hall sensor failure, lock-up, or brake failure
- Repairment: replace the motor
- Motor Description:
  a. Figure (6) U/V/W: motor phase wires connected to the lower controller U/V/W terminals (see Figure (4) ①/②)
  b. Figure (6) ①: motor gearbox
  c. Figure (6) ③: motor brake switch. Up Position: Brake released (switch off). Down Position: Brake engaged (switch on). The motor brake must be released (switch off) to operate the machine

Figure (6)

Heruntergeladen von Gast (IP 216.73.217.22) am 19.10.2026 um 02:25 Uhr · sana.swiss

d. Figure (6) ④: motor brake Hall sensor wires connected to the lower controller HALL1/HALL2 terminals (see Figure (4) ③/④)

2.2.6 Armrest Light

- Installation Position: front end of the right or left armrest
- Function: provides lighting and supplies power for mobile devices (USB/Type-C charging)
- Fault: lamp not working, communication failure
- Repairment: replace the armrest light
- Armrest Light Description:
  a. Figure (7) ①: connection terminal for the upper and lower controller connection cable
  b. Figure (7) ②: armrest light switch sensing spring
  c. Figure (7) ③: connection terminal for the armrest light cable (connected to Figure (7) ④)
  d. Figure (7) ⑤: armrest light beads
  e. Figure (7) ⑥: USB/Type-C charging ports for mobile devices

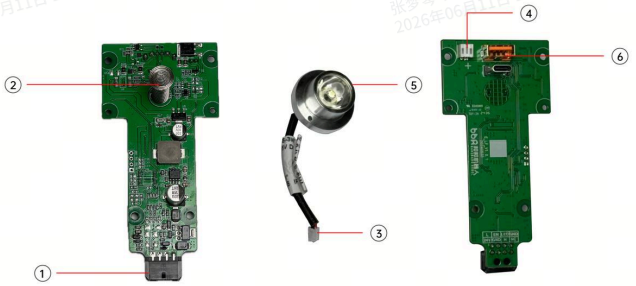

Figure (7)

III. Common Troubleshooting and Fault Code Solutions

Heruntergeladen von Gast (IP 216.73.217.22) am 19.10.2026 um 02:25 Uhr · sana.swiss

3.1 Common faults and solutions

Electronic control:

3.1.1 Fail to Boot up

- Check whether the battery is properly installed in the battery compartment and whether the battery latch can be securely locked.
- Remove the battery, and check if there is any rust on metal parts. If not, proceed to the next step;
- Charge the battery and observe whether the charger can supply power normally (indicated by a red light) . If not, replace the charger.
- If the charger works normally, directly plug the charger into the charging port beneath the upper controller. Then check whether the machine can be turned on normally. If not, replace the upper controller.
- If the machine can be powered on, check whether the upper and lower controller connection cable is securely plugged in (the armrest cover needs to be removed);
- If the machine still fails to boot up after the steps above, replace the lower controller.

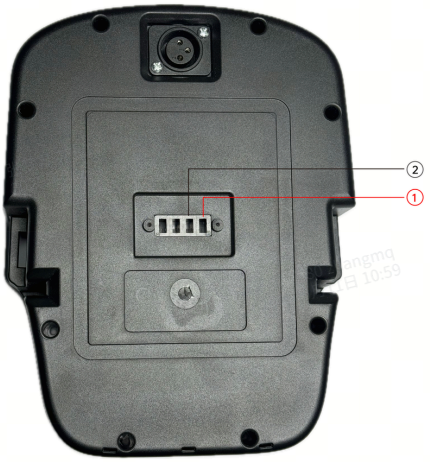

Figure (8)

3.1.2 Fail to Drive Straight

- Check the rear tire pressure. If the tire pressure is insufficient, inflate the rear tires.
- Check whether there are foreign objects (such as hair, wire, hemp rope, etc.) inside the bearing of front wheels. If so, foreign objects need to be removed first.
- If the machine still drifts to one side, the motor on that side has a slower revs (i.e., if the vehicle always drifts to the left, the left motor has a slow rotation speed). Balance the motor revs through the app, or replace the slower motor.

Heruntergeladen von Gast (IP 216.73.217.22) am 19.10.2026 um 02:25 Uhr · sana.swiss

3.1.3 Unable to Reach the Maximum Speed

If the maximum speed of the machine drops suddenly, false triggering is probable. It's highly likely that the machine entered 'General Mode' from 'Enhanced Mode' accidentally. Long press the "Fn" button on the upper controller to switch the driving mode. Release the button after hearing the 'BEEP' sound.

Figure (9)

3.1.4 Abnormal Motor Noise

Remove the rear wheels. Then start the machine and push joystick to let two motors spin. If there is any sound other than the current, the motor is faulty. Replace the motor with abnormal noise to troubleshoot.

Structure:

3.1.5 Front Wheel Suspension

Check whether two rear tires are underinflated. If so, inflate the tyre as needed to troubleshoot.

Note: If the rear wheel is deflated, check whether the tire is punctured or the valve core is loose.

3.1.6 Abnormal Omnidirectional Wheel Noise

- Lift up the front wheel in the air. Rotate the omini-directional wheel rubber rotor bearing to check resistance. If the resistance is too high to rotate the wheel or the bearing is loose, the rubber rotor bearing is faulty. Replace the omni-directional wheel to troubleshoot. See Figure (10).

Figure (10)

- Check whether there are tiny stones stuck in the anti-skid slot of the rubber rotor. If so, clear out the stones with a stone clearance hook to troubleshoot. See Figure (11).

Heruntergeladen von Gast (IP 216.73.217.22) am 19.10.2026 um 02:25 Uhr · sana.swiss

See Figure (11)

3.1.7 Joint Pin of Backrest Lock Adjustment Stuck

If the joint pin of backrest lock adjustment is stuck, press backward the backrest slightly before pulling. See details in Robooter's uploaded adjustment videos.

3.2 Fault Code Troubleshooting and Solutions

Explanation: If the machine doesn't move after starting and voice alert is triggered, red font fault code would show on LCD screen. Please refer to descriptions below to troubleshoot.

3.2.1 Code: 20/21/22/23 - Voice Alert: Joystick Protection - Fault Diagnosis: Joystick Signal Cable Disconnection

Fault: Joystick cable is disconnected.

- Before troubleshooting, check whether the dust cover at the bottom of the joystick is dented. If a dent is found, the dust cover should be smoothed out. During the troubleshooting process, please do not operate the joystick to prevent affecting the accuracy of the troubleshooting results.
- Remove the upper controller and check whether the terminal of the joystick cable is loose. If so, re-plug the joystick cable.
- If the fault code still exists, replace the upper controller.

Heruntergeladen von Gast (IP 216.73.217.22) am 19.10.2026 um 02:25 Uhr · sana.swiss

3.2.2 Code: 24 - Voice Alert: Joystick Protection - Fault Diagnosis: Joystick Non-zero Position Startup

Fault: Joystick was not in zero position when the machine started up.

- When starting the machine, the joystick was accidentally touched. Turn off the machine and restart to troubleshoot.
- The machine starts up without touching the joystick but still reporting an error. Check if there is any dents in the black dust cover at the bottom of the joystick that interferes with the joystick's return to zero position. If so, sort out the concave part of the dust cover. Turn off the machine and restart it to troubleshoot.
- Remove the upper controller and check whether the terminal of the joystick cable is loose. If so, re-plug the joystick cable.
- If the fault code still exists, replace the upper controller.

3.2.3 Code: 40 (Left) /41 (Right) /42 (Left and Right) - Voice Alert: Brake Open - Fault Diagnosis: Motor Brake Switch on

Fault: The motor brake switch is on.

- Check the position of the left or right motor electromagnetic switch (raise up to turn off and press down to turn on the motor electromagnetic brake). If the motor brake switch is on, turn off the switch to troubleshoot.
- If the brake is in closed state, unplug the motor cable and then replug it into the lower controller.
- If the fault code exists after replugging the cables, swap two motors' positions. If the fault code changes, replace the motor.
- If the fault code exists after replacing the motor, replace the lower controller.

3.2.4 Code: 80 - Voice Alert: Driver Protection - Fault Diagnosis: Low Battery Voltage

Fault: The battery voltage is too low.

- Remove the battery and charge it. If it can't be charged, replace the battery.
- If it can be charged fully, install it on the machine and check whether the fault code disappears. If the fault code exists, replace the lower controller.

3.2.5 Code: 81 (Right) /82 (Left) /83 (Left and Right) - Voice Alert: Driver Protection - Fault Diagnosis: Motor Hall Sensor Signal Abnormality

Heruntergeladen von Gast (IP 216.73.217.22) am 19.10.2026 um 02:25 Uhr · sana.swiss

Fault: Motor Hall sensor signal is interrupted.

- Remove the lower controller and check whether the Hall sensor plug is loose or the cable is broken. If so, replace the motor to troubleshoot.
- If the cables are in good condition, swap two motors' positions. If the fault code changes, replace the motor.
- If the fault code exists after replacing the motor, replace the lower controller.

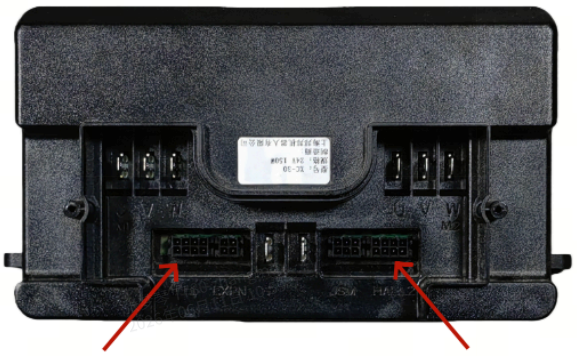

Figure (12)

3.2.6 Code: 84/85/86/87 - Voice Alert: Driver Protection - Fault Diagnosis: MOSFET Short Circuit

Fault: Excessive current in the lower controller caused the MOSFET to fail.

Replace the lower controller.

3.2.7 Code: 88 - Voice Alert: Driver Protection - Fault Diagnosis: Precharge Failure

Replace the lower controller.

3.2.8 Code: 94 (Right) /95 (Left) /96 (Left and Right) - Voice Alert: Driver Protection - Fault Diagnosis: Motor Stall

Fault: The motor is stalled, causing excessive current on one or both sides.

1. Open the motor brake and lift the rear wheels on both sides of the machine.
2. Check whether the rear wheel can rotate. If not, replace the motor.
3. If the rear wheel can rotate, replace the lower controller.

3.2.9 Code: 90 - Voice Alert: Machine Protection - Fault Diagnosis: High Battery Voltage

Fault: The battery voltage is too high.

- Remove the battery and charge it. If it can't be charged, replace the battery.

Heruntergeladen von Gast (IP 216.73.217.22) am 19.10.2026 um 02:25 Uhr · sana.swiss

- If it can be charged fully, install it on the machine and check whether the fault code disappears. If the fault code exists, replace the lower controller.

3.2.10 Code: E1- Voice Alert: Keypad Failure - Fault Diagnosis: Invalid Upper Controller Keypad

Fault: A button on the upper controller is stuck and continuously transmits a signal for more than 60 seconds.

Check whether the function button of the upper controller is stuck and does not rebound after pressing. If so, dial the button to make it rebound. If it cannot rebound, replace the upper controller.

3.2.11 Code: E6 - Voice Alert: Machine Protection - Fault Diagnosis: Communication between the Upper and Lower Controller Failure

Fault: Communication between the upper and lower controllers is interrupted.

- Remove the battery from the machine for ten seconds, then install the battery on the machine. Restart the machine. If the fault code exists, visually check the folding position of the machine to see whether there are wear or obvious extrusion marks on the upper and lower controller connection cable. If so, replace the upper and lower controller connection cable.
- If the upper and lower controller connection cable is in good condition, check whether the armrest light can be turned on and off normally. If not, remove the armrest light and restart the machine. If the fault code is eliminated, replace the armrest light.
- If the armrest light can be turned on and off normally, remove the armrest light and install the upper controller in place of the armrest light. If the fault code is eliminated, replace the upper and lower controller connection cable.
- If the upper and lower controller connection cable is replaced and the upper controller takes the place of the armrest light, the fault code still exists, replace the lower controller.
- If the lower controller is replaced and the fault code still exists, replace the upper controller.
- If the upper controller is replaced and the fault code still exists, replace the upper and lower controller connection cable.

3.2.12 Code: E7 - Voice Alert: Machine Protection - Fault Diagnosis: FLASH Memory Failure

Fault: Configuration data in the FLASH memory chip is lost.

- Turn off the machine and restart to troubleshoot.

Heruntergeladen von Gast (IP 216.73.217.22) am 19.10.2026 um 02:25 Uhr · sana.swiss

- If the fault code still exists after restart, replace the upper controller.

IV. Replacement and Repair of Machine Spare Parts

Attention (Important):

1. **During the operation, the battery needs to be removed. Hot-line work is prohibited.**
2. **Disassemble the screws and place them in order to avoid using the wrong screws during installation.**
3. **The missing gasket needs to be complemented.**

4.1 Upper Controller/Armrest Light Removal & Installation

Tools required: 3mm T-shaped hex wrench, cross screwdriver

1. Use a 3mm T-shaped hex wrench to remove the three internal hex fastening screws under the armrest (see Figure (13) ①②③).
2. Pull the upper controller or armrest light out of the armrest.
3. Press and hold the upper controller/armrest light terminal buckle switch to remove the plug (see Figure (2) ①)

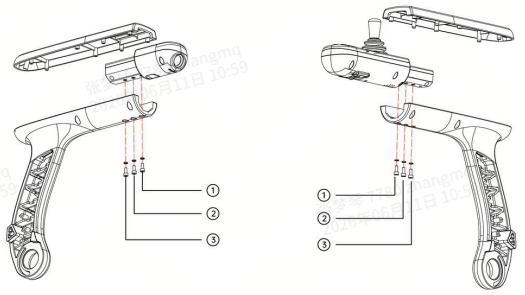

Figure (13)

Reverse the procedures above to install.

Note: Connect the upper controller/armrest light terminal carefully and correctly to avoid short circuit and smoke.

4.2 Lower Controller Removal & Installation

Tools required: 3mm T-shaped hex wrench, cross screwdriver

1. Use a 3mm T-shaped hex wrench to remove the three internal hex fastening screws used to fix the lower controller bracket (see Figure (14) ①②③).

Heruntergeladen von Gast (IP 216.73.217.22) am 19.10.2026 um 02:25 Uhr · sana.swiss

2. Use a 3mm T-shaped hex wrench to remove the four internal hex fastening screws used to fix the lower controller onto the lower controller bracket (see Figure (14) ④⑤⑥⑦).
3. Use a cross screwdriver to remove the two screws used to fix the lower controller to the rear housing (see Figure (14) ⑧).
4. Use a cross screwdriver to remove the two fixing screws on the lower controller brackets and rear housing to remove the lower controller brackets (see Figure (14) ⑩⑪).
5. Use a cross screwdriver to remove the two fixing screws for the lower controller groove cover plate to remove the cover plate (see Figure (14)).
6. Remove the lower controller connection terminal plug in turn (see Figure (4) ①②③④⑤⑥⑦).

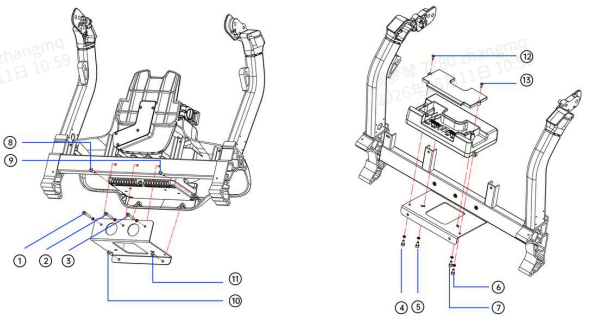

Figure (14)

Reverse the procedures above to install.

4.3 Motor Removal & Installation

Tools required: 4mm T-shaped hex wrench, 5mm T-shaped hex wrench, 4 * 150mm cable tie, cross screwdriver, 3mm T-shaped hex wrench, Loctite 243 thread glue

1. Fold the machine and support it with the anti-tip wheel. Keep the rear wheel suspended.
2. Pinch the three corners of the hub trim cover with your fingers and remove the hub trim cover (see Figure (15) ①).
3. Use a 4mm T-shaped hex wrench to remove the rear wheel with three internal hex fastening screws (see Figure (15) ②③④).
4. Lift the machine 90 degrees upward.

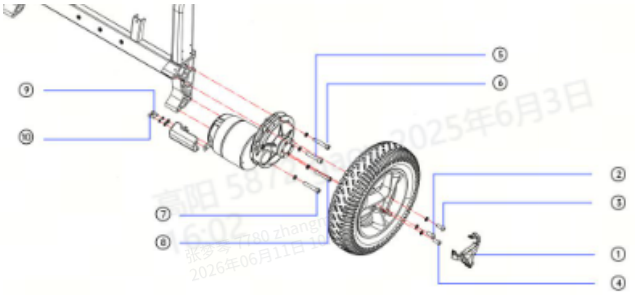

Heruntergeladen von Gast (IP 216.73.217.22) am 19.10.2026 um 02:25 Uhr · sana.swiss

5. Use a 3mm T-shaped hex wrench to remove the three internal hex fastening screws used to fix the lower controller bracket (see Figure (14) ①②③).
6. Use a cross screwdriver to remove the two screws used to fix the lower controller to the rear housing (see Figure (14) ⑧).
7. Use a cross screwdriver to remove the two fixing screws on the lower controller brackets and rear housing to remove the lower controller brackets (see Figure (14) ⑩⑪).
8. Use a cross screwdriver to remove the two fixing screws for the lower controller groove cover plate to remove the cover plate (see Figure (14)).
9. Remove the motor phase wire & Hall sensor cable plug from the U\ V\ W\ HALL1\ HALL2 port of the lower controller (M1 left motor phase wire-M2 right motor phase wire HALL1 (left motor Hall sensor cable) \ HALL2 (right motor Hall sensor cable). See Figure (4) ①②③④.
10. Use diagonal pliers to cut the motor cable tie.
11. Use a 5mm T-shaped hex wrench to remove the four internal hex fastening screws fixing the motor to remove the motor (see figure (15) ⑤⑥⑦⑧).
12. Use a 3mm T-shaped hex wrench to remove the two fixing screws of the motor brake plate buckle to remove the motor brake plate buckle (See Figure (15) ⑨⑩).

Reverse the procedures above to install.

Note: Installation of rear wheel (see Figure (15) ②③④)/motor fixing screw (see Figure

Figure (15)

Heruntergeladen von Gast (IP 216.73.217.22) am 19.10.2026 um 02:25 Uhr · sana.swiss

(15) ⑤⑥⑦⑧) needs to add one drop of Loctite 243 thread glue.

4.4 Storage Basket Removal & Installation

Tools required: 4mm T-shaped hex wrench

Use a 4mm T-shaped hex wrench to remove the four internal hex screws front and back of the storage basket (See Figure (16) ①②③④).

Reverse the procedures above to install.

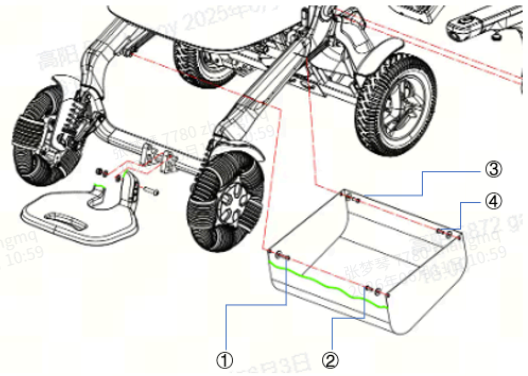

Figure (16)

4.5 Rear Housing & Power Cord Removal & Installation

Tools required: 3mm T-shaped hex wrench, cross screwdriver, pointed nose pliers

1. Lift the machine at 90° to the ground (note: Place the machine on a soft cushion to avoid scratches on the backrest).
2. Use a cross screwdriver to remove four fixing screws at the bottom of the rear housing (See Figure (17) ①②③④).
3. Use a cross screwdriver to remove two fastening screws on the lower controller and the rear housing (See Figure (14)).
4. Use a cross screwdriver to remove two fastening screws on the lower controller bracket and the rear housing (See Figure (14)).
5. Lift the machine flat.

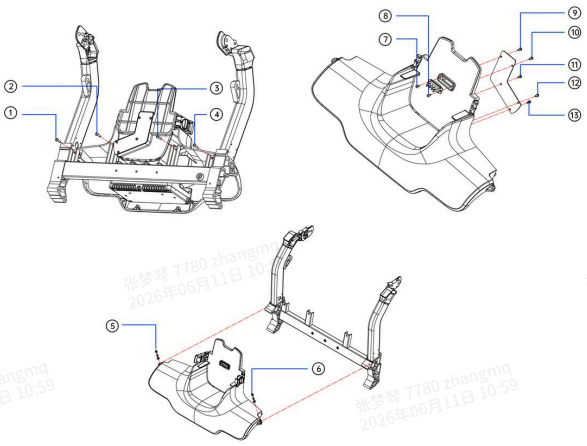

Figure (17)

Heruntergeladen von Gast (IP 216.73.217.22) am 19.10.2026 um 02:25 Uhr · sana.swiss

6. Use a 3mm T-shaped hex wrench to remove the two hex fastening screws on the left and right sides of the rear housing to remove the rear housing (See Figure (17) ⑤⑥).
7. Use a cross screwdriver to remove the two fixing screws for the lower controller groove cover plate to remove the cover plate (see Figure (14)).
8. Use diagonal pliers to clamp the bottom of the positive and negative plugs of the lower controller power cord and take them off (See Figure (4) +/-).
9. Remove the battery indicator light cable plug (see Figure (4) ⑤).
10. Use a cross screwdriver to remove the two fastening screws on the battery compartment power plug (see Figure (17) ⑦⑧).
11. Use a cross screwdriver to remove the five fastening screws on the rear housing groove cover plate and take off the cover plate (see Figure (17)⑨⑩⑪⑫⑬).
12. Remove the cable.

Reverse the procedures above to install.

V. Warranty Policy and Routine Maintenance

5.1 Safety Precautions and Important Warnings

- **Safety First:** Read the "User Manual" carefully before use, maintenance or repair.
- **Regular Inspection:** Conduct a basic safety inspection every three months and a comprehensive professional inspection annually.
- **Professional Operation:** Inspection, repair, and replacement of core components (such as motors, controllers, frames, etc.) must be carried out professionally.

Heruntergeladen von Gast (IP 216.73.217.22) am 19.10.2026 um 02:25 Uhr · sana.swiss

- **Original Parts:** Use original parts provided by Robooter to ensure safety and performance.
- **Modification Risks:** Non-authorized modification is forbidden and violates the warranty policy.

5.2 Warranty Policy

5.2.1 Warranty Period

- Adhere to the warranty period requirement if mentioned in contract.
- 18 months free warranty for complete machine since machine shipped from Robooter, some spare parts take different warranty periods (See details in the After-sales Policy).
- For new parts replaced free of charge during the warranty period, the warranty period of the new parts shall continue for the remaining warranty time.
- For newly purchased parts, the warranty period of the new parts shall be recalculated according to the warranty policy.
- Complimentary parts do not provide warranty service.

5.2.2 Warranty Instructions

- Submit purchase invoices or contract when applying for free warranty.
- For the extended warranty purchased or the extended warranty promised by Robooter, it is necessary to provide a voucher such as invoice, email or contract.

5.2.3 Non-warranty Scope

If any of the following situations occur during the warranty period, Robooter will not provide free warranty services.

1. Unable to provide valid warranty vouchers or product purchase vouchers.
2. Products sold by non-manufacturer-designated distributors or platform flagship stores.
3. Damage caused by misoperation, abuse, or improper transportation, maintenance, or storage.
4. Damage caused by force majeure or accidental events, such as fire, natural disasters, war, terrorist attacks, etc.
5. Damage caused by unauthorized disassembly or modification without the manufacturer's permission.
6. Malfunctions occur after repairs using non-original parts.
7. Malfunctions occur after repairs carried out by personnel unauthorized by the manufacturer.
8. Other non-product quality issues, such as human-caused malfunctions or damages.

Heruntergeladen von Gast (IP 216.73.217.22) am 19.10.2026 um 02:25 Uhr · sana.swiss

9. Natural aging, discoloration, or wear and tear that occurs during the product's use.
10. Free gifts with the machine do not provide warranty services.

5.3 Maintenance of Specific Parts

5.3.1 Omnidirectional Wheel Maintenance:

a. If driving on flat asphalt or cement roads, it is recommended to check for every 2-3 months. Use a soft towel or wear labor protection gloves to check whether there is any abnormal noise, looseness, or resistance when the omnidirectional wheel roller rotates. If exists, contact the after-sales service in time for help. If no, spray cleaning lubricant on the roller bearing gaps and surfaces for cleaning. Check whether there is dirt or sediment on the wheel rubber surface. Use foam cleaning agent to spray and wipe with a towel. Use stone cleaning tools to clean the stones attached to the wheel surface.

b. If driving outdoors for a long time on gravel roads, muddy roads, or long rainy days, you need to use a cleaning lubricant to clean the dirt and sediment attached to the surface of the wheel and inside the roller bearing after use. The rubber surface of the wheel should be cleaned with foam and wiped with a towel. The stones attached to the wheel should be cleaned with a stone cleaning hook.

5.3.2 Tire Inspection:

a. **Tighten the rear wheel screws**

If the machine is used frequently, it is better to inspect the rear wheels every three months. Use a 3mm hex wrench to carefully tighten the fastening screws of the rear wheels to prevent them from loosening or falling off. Once rust is found on the fastening screws, they must be replaced in time to avoid affecting driving safety.

b. **Tire inflation**

To ensure the normal use of rear inflatable tires, it is recommended to inflate the rear tires once a month. Timely gas replenishment can avoid accelerating tire wear due to air deficiency so as to extend tire service life.

c. **Tire replacement**

Pay attention to the condition of the tires in daily use. If there are bulges, cracks, or severe wear and tear on the tread, the tires should be replaced as soon as possible. Otherwise, it is easy to cause tire blowouts or a significant increase in braking distance due to insufficient grip, which threatens the safety of the user.

5.3.3 Battery Maintenance

5.3.3.1 **How to correctly understand the "battery range"?**

Heruntergeladen von Gast (IP 216.73.217.22) am 19.10.2026 um 02:25 Uhr · sana.swiss

- The range of an electric wheelchair refers to the maximum continuous driving distance after a single full charge under standard test conditions.
- The test standards are in accordance with relevant national standards, such as: ambient temperature 25±2°C, flat cement road surface, load 75kg, driving at a constant speed of 3.5km/h until the battery voltage drops to the protection threshold.
- The actual range needs to be determined and estimated by the user based on usage conditions.

5.3.3.2 What are the main factors affecting battery life?

- During daily use, the battery life is easily affected by factors such as load (for every additional 10kg, the battery life decreases by approximately 8%), road gradient (for every 5° slope, the battery life decreases by 15%), temperature (when the temperature is between 0°C and 10°C, the battery life is only 60% of that at normal temperature), etc.
- The larger the capacity, the longer the theoretical range. The E models are available with 8AH, 12Ah, 16AH, 20Ah, and 25Ah batteries. Users should select the battery with the appropriate capacity based on their environment and road conditions to meet their usage needs.
- The reduction in range caused by the deterioration of the machine's overall performance status, such as a jammed caster or insufficient rear tire pressure, will increase rolling resistance and energy consumption.

5.3.3.3 Battery Maintenance Principles

1. Appropriate Charge Duration. Keep the battery range at 20%~90%. Avoid long time fully charged or under voltage.
2. Original Charger. Use the original slow charging charger (3A). Reduce fast charging frequency to avoid overheating or aging of the battery.
3. Appropriate Temperature. Ideal charging temperature: 20°C~35°C. Avoid charging instantly after exposure to the sun.
4. Charge Regularly. Keep the battery range at 50%~60% if not using the battery for over a month. Store the battery in a dry environment at 10°C to 30°C and recharge once every one to two months.

5.3.3.4 Remove and Store the Battery Separately

- Even when the wheelchair is turned off, the controller, instrument, Bluetooth module, etc. may still have standby currents in the microampere range. Long-term parking (e.g., 1 month) may slowly drain the battery charge to <10% or even 0%, posing risks such as internal short circuits, BMS lockout, and permanent capacity degradation.

Heruntergeladen von Gast (IP 216.73.217.22) am 19.10.2026 um 02:25 Uhr · sana.swiss

- Wheelchairs are often parked in places such as garages, balconies, and stairwells, and are susceptible to environmental factors such as high temperatures (sun exposure in summer >45°C) and low temperatures (in winter < -10°C) .
- When taken out separately, it can be stored in a dry and thermostatically controlled indoor environment, significantly reducing risks and facilitating regular maintenance.

5.3.3.5. Prolong Battery Range

- **Smooth operation** : Avoid sudden acceleration or braking. Driving at a constant speed can reduce energy consumption by more than 30%.
- **Load Reduction**: Do not carry unnecessary items.
- **Road Condition Prediction** : Plan your route in advance to avoid steep slopes, as the power consumption when climbing is three times that on flat roads.
- **Tire Pressure Maintenance** : Regularly monitor tire pressure; insufficient tire pressure reduces range by 10%-15%.
- **Spare Battery**: Purchase a spare travelling battery to extend driving distance.

5.3.4 Structure and Connection Inspection

- Inspect the connection parts of the frame regularly. Weekly or monthly inspections should take the frequency of use into account. Key inspection items should be components including screws and nuts. Confirm whether there are any problems such as looseness, detachment, rust, etc. Once found, replace or tighten them in time to ensure the overall stability of the machine structure.
- Inspect the folding parts regularly to see if there are any abnormal conditions such as jamming or falling off. If any problems are found, the corresponding parts should be repaired or replaced immediately to ensure the normal folding function and safe use of the machine.

5.4 Special Weather Protection

a. **Humid weather**

If encountering rainy or other humid weather, the machine should be wiped clean with a clean cloth as soon as possible after use to avoid it from getting damp and rusting, which will affect the machine's performance and lifespan.

b. **Hot weather**

Do not expose the machine to the sun for a long time in hot weather, as high temperatures may damage the material, electronic components, and batteries of the machine.

Note:

Heruntergeladen von Gast (IP 216.73.217.22) am 19.10.2026 um 02:25 Uhr · sana.swiss

1. **Do not overuse spray cleaning agent to prevent electronic components from getting damp thus causing damage.**
2. **If rust is found on the screw, use WD-40 rust removal lubricant for cleaning. This lubricant can effectively remove rust and lubricate, as well as keep the screw in good condition.**
3. **For tire cleaning, cleaning agents should be sprayed as needed. Do not forget to use a clean dry towel to carefully wipe the residual cleaning agent on the tire surface to prevent the tire from slipping or increasing the braking distance.**

张梦琴 7780 zhangmq 2026年06月11日 10:59

Heruntergeladen von Gast (IP 216.73.217.22) am 19.10.2026 um 02:25 Uhr · sana.swiss