E40 - Service Manual

Catalog:

I. Exploded Diagram of the Machine

II. Electrical Schematic and Electrical Components Overview

III. Common Troubleshooting and Fault Code Solutions

IV. Replacement and Repair of Machine Spare Parts

V. Warranty Policy and Routine Maintenance

I. Exploded Diagram of the Machine

E40:

Heruntergeladen von Gast (IP 216.73.217.22) am 19.10.2026 um 04:20 Uhr · sana.swiss

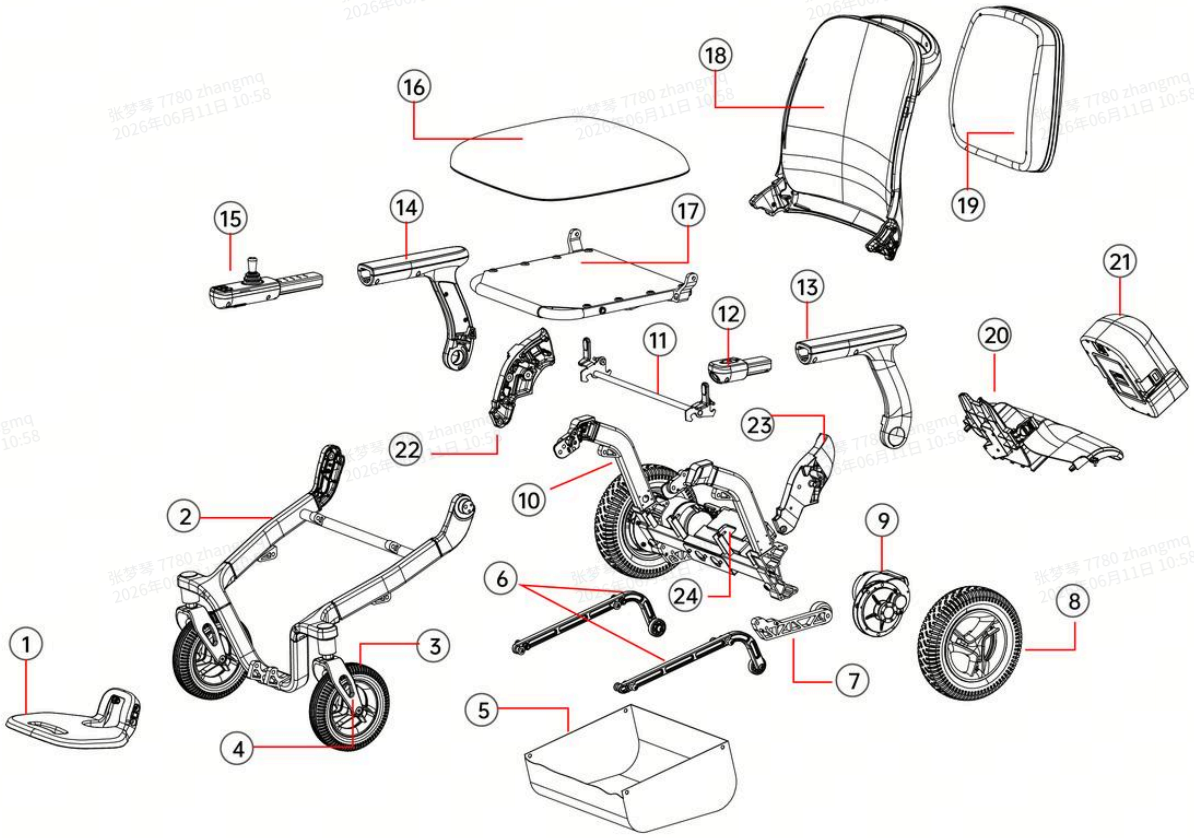

1. Footrest	2. Front Bracket	3.8-inch UP Front Wheel	4. Front Fork Assembly	5. Storage Basket	6. Bracket Link Assembly
7. Anti-tip wheel assembly	8. Rear Wheel Assembly	9. Motor	10. Rear Bracket	11. Hook Assembly	12. Armrest Light
13. Left Armrest Assembly	14. Right Armrest Assembly	15. Upper controller	16. Seat Cushion	17. Seat Frame	18. Backrest Assembly
19. Backpack	20. Rear Housing assembly	21. Battery	22. Right Backrest Die Casting	23. Left backrest Die Casting	24. Lower Controller

II. Electrical Schematic and Electrical Components Overview

Heruntergeladen von Gast (IP 216.73.217.22) am 19.10.2026 um 04:20 Uhr · sana.swiss

2.1 Electrical Schematic

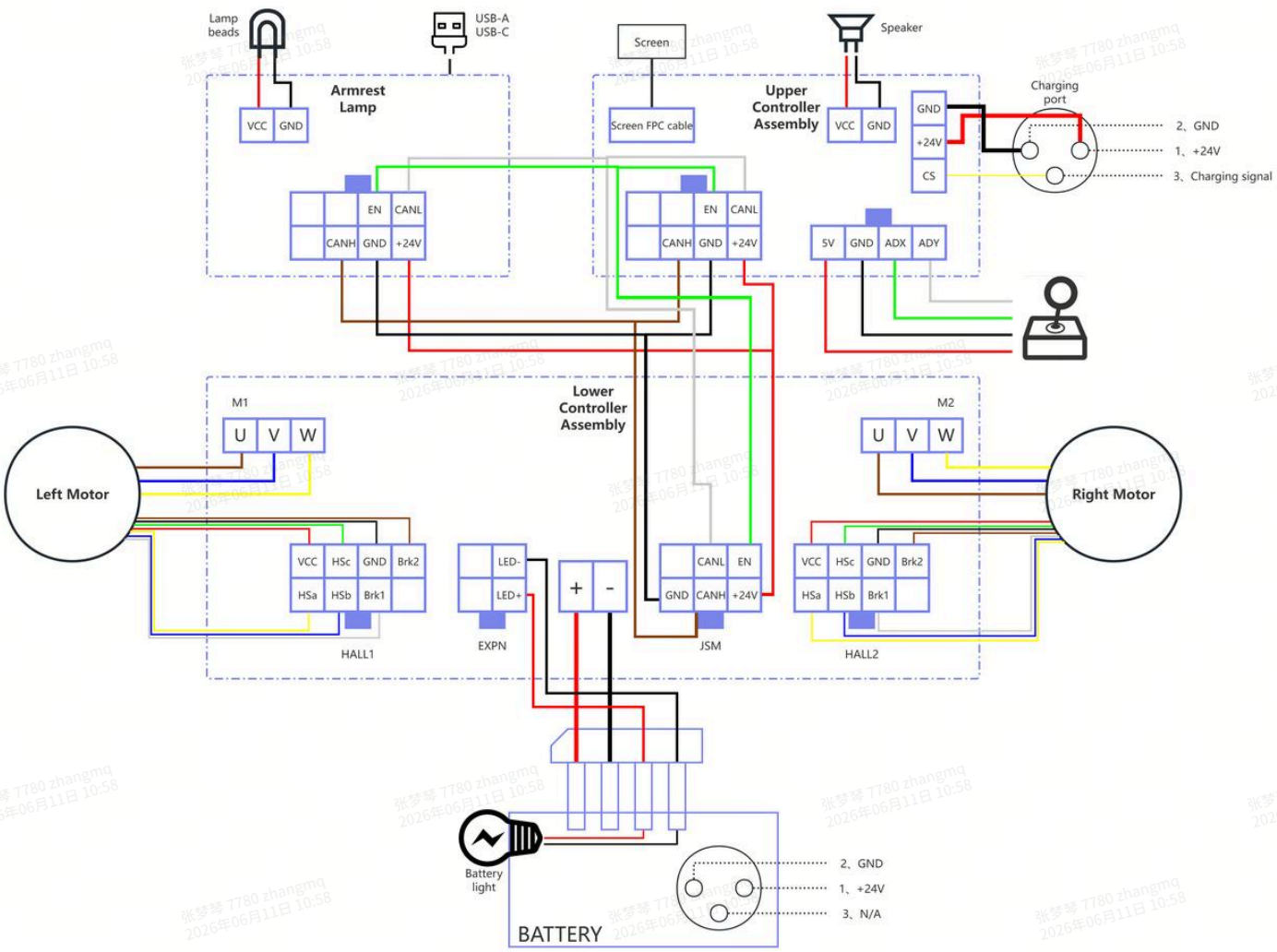

2.2 **Electrical Components Overview**

2.2.1 Upper and Lower Controller Connection Cable

- Installation Position: inside the armrest and rear bracket tube (see Figure (2) ①)
- Function: enables communication between the upper and lower controller and supplies power to the upper controller
- Fault: wiring disconnection or terminal loosening.
- Repairment: replace the upper and lower controller connection cable

Figure (1)

Heruntergeladen von Gast (IP 216.73.217.22) am 19.10.2026 um 04:20 Uhr · sana.swiss

- Cable Connection Description:
  a. Figure (1) ①: connected to the upper controller and armrest light
  b. Figure (1) ② : connected to the lower controller JSM port (see Figure (4) ⑦)

Figure (2)

2.2.2 Lower Controller and Battery Connection Cable

- Installation Position: bottom of the rear housing
- Function: supplies power to the machine and the battery indicator light
- Fault: wiring disconnection, terminal oxidation, or fuse blown
- Repairment: replace the lower controller and battery connection cable
- Cable Connection Description:
  a. Figure (3) ①: installed in the rear housing to connect battery
  b. Figure (3) ②: connected to the lower controller EXPN port (see Figure (4) ⑤)
  c. Figure (3) +/- : connected to the lower controller +/- terminals (see Figure (4) ⑥)

Figure (3)

2.2.3 Lower Controller

- Installation Position: rear bracket beam, bottom of the rear housing

Heruntergeladen von Gast (IP 216.73.217.22) am 19.10.2026 um 04:20 Uhr · sana.swiss

- Function: executes transmission and drive instructions from the upper controller and supplies power to the machine
- Fault: communication failure, short circuit
- Repairment: replace the lower controller
- Cable Connection Description:
  a. Figure (4) ① and ②: motor phase wire terminals; ① is for the left motor (U/V/W), and ② is for the right motor (U/V/W) (see Figure (6))
  b. Figure (4) ③ and ④: motor Hall sensor terminals; ③ is for the left motor (HALL1), and ④ is for the right motor (HALL2) (see Figure (6))
  c. Figure (4) ⑤: battery indicator light cable terminal (see Figure (3) ②)
  d. Figure (4) ⑥: battery lower controller connection cable terminals (+/-) (see Figure (3) +/-)
  e. Figure (4) ⑦: the upper and lower controller connection cable terminal (see Figure (2) ①)

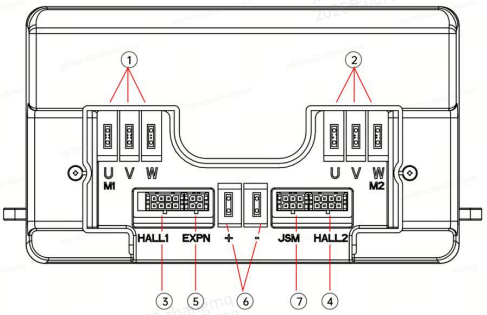

Figure (4)

2.2.4 Upper Controller

- Installation Position: front end of the right or left armrest
- Function: Bluetooth connection, function display, transmission of machine control instructions, and battery charging
- Fault: communication failure, short circuit
- Repairment: replace the upper controller
- Cable Connection Description:

Heruntergeladen von Gast (IP 216.73.217.22) am 19.10.2026 um 04:20 Uhr · sana.swiss

a. Figure (5) ①: connection port for the LCD display cable
b. Figure (5) ②: connection port for the joystick communication cable
c. Figure (5) ③: charging port for the upper controller cable
d. Figure (5) ④: connection port for the speaker cable
e. Figure (5) ⑤: connection port for the upper and lower controller cable (see Figure (2) ①)

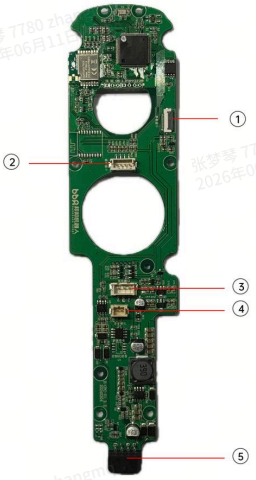

Figure (5)

2.2.5 Motor

- Installation Position: left and right sides of the rear bracket bottom
- Function: drives the machine and provides braking
- Fault: abnormal noise, phase loss, Hall sensor failure, lock-up, or brake failure
- Repairment: replace the motor
- Motor Description:
  a. Figure (6) U/V/W: motor phase wires connected to the lower controller U/V/W terminals (see Figure (4) ①/②)
  b. Figure (6) ①: motor gearbox
  c. Figure (6) ③: motor brake switch. Up Position: Brake released (switch off). Down Position: Brake engaged (switch on). The motor brake must be released (switch off) to operate the machine

Figure (6)

Heruntergeladen von Gast (IP 216.73.217.22) am 19.10.2026 um 04:20 Uhr · sana.swiss

d. Figure (6) ④: motor brake Hall sensor wires connected to the lower controller HALL1/HALL2 terminals (see Figure (4) ③/④)

2.2.6 Armrest Light

- Installation Position: front end of the right or left armrest
- Function: provides lighting and supplies power for mobile devices (USB/Type-C charging)
- Fault: lamp not working, communication failure
- Repairment: replace the armrest light
- Armrest Light Description:
  a. Figure (7) ①: connection terminal for the upper and lower controller connection cable
  b. Figure (7) ②: armrest light switch sensing spring
  c. Figure (7) ③: connection terminal for the armrest light cable (connected to Figure (7) ④)
  d. Figure (7) ⑤: armrest light beads
  e. Figure (7) ⑥: USB/Type-C charging ports for mobile devices

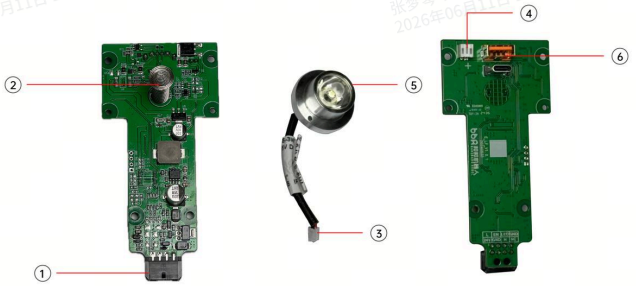

Figure (7)

III. Common Troubleshooting and Fault Code Solutions

3.1 Common faults and solutions

Heruntergeladen von Gast (IP 216.73.217.22) am 19.10.2026 um 04:20 Uhr · sana.swiss

Electronic control:

3.1.1 Fail to Boot up

- Check whether the battery is properly installed in the battery compartment and whether the battery latch can be securely locked.
- Remove the battery, and check if there is any rust on metal parts. If not, proceed to the next step;
- Charge the battery and observe whether the charger can supply power normally (indicated by a red light) . If not, replace the charger.
- If the charger works normally, directly plug the charger into the charging port beneath the upper controller. Then check whether the machine can be turned on normally. If not, replace the upper controller.
- If the machine can be powered on, check whether the upper and lower controller connection cable is securely plugged in (the armrest cover needs to be removed);
- If the machine still fails to boot up after the steps above, replace the lower controller.

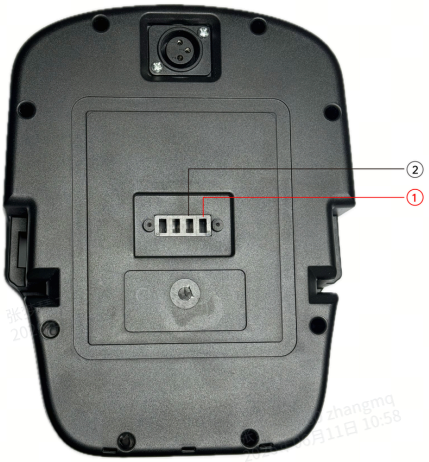

Figure (8)

3.1.2 Fail to Drive Straight

- Check the rear tire pressure. If the tire pressure is insufficient, inflate the rear tires.
- Check whether there are foreign objects (such as hair, wire, hemp rope, etc.) inside the bearing of front wheels. If so, foreign objects need to be removed first.
- If the machine still drifts to one side, the motor on that side has a slower revs (i.e., if the vehicle always drifts to the left, the left motor has a slow rotation speed). Balance the motor revs through the app, or replace the slower motor.

3.1.3 Unable to Reach the Maximum Speed

Heruntergeladen von Gast (IP 216.73.217.22) am 19.10.2026 um 04:20 Uhr · sana.swiss

If the maximum speed of the machine drops suddenly, false triggering is probable. It's highly likely that the machine entered 'General Mode' from 'Enhanced Mode' accidentally. Long press the "Fn" button on the upper controller to switch the driving mode. Release the button after hearing the 'BEEP' sound.

Figure (9)

3.1.4 Abnormal Motor Noise

Remove the rear wheels. Then start the machine and push joystick to let two motors spin. If there is any sound other than the current, the motor is faulty. Replace the motor with abnormal noise to troubleshoot.

3.1.5 Bluetooth Locked

If the joystick fails to work, showing Bluetooth locking the machine, find the remote control to unlock the machine.

Figure (10)

3.1.6 Sudden Stop while Driving

- Check if the battery is securely plugged in. If not, lock the battery latch tightly. See Figure (11).
- Remove the battery. Check if the battery lower controller connection cable plug is secure. If there is looseness, oxidation (greening), or ablation (blackening), replug the cable or replace the cable. See Figure (12).

Figure (11)

Heruntergeladen von Gast (IP 216.73.217.22) am 19.10.2026 um 04:20 Uhr · sana.swiss

- If the machine has been used for more than one year, remove the battery for charging. After the battery is fully charged, start the machine and use it. If the battery drains quickly, replace the battery.
- If the battery works normally, check whether the upper and lower controller connection cable is loose and re-plug it. If the cable is damaged, especially at the positions where the armrest rotates and the machine folds, replace the upper and lower controller connection cable.
- If all the above inspections are completed but the fault still exists, replace the battery lower controller connection cable.
- If the fault still exists after replacing the battery lower controller connection cable, replace the battery.

Figure (12)

Figure (13)

Structure:

3.1.8 Front Wheel Suspension

Check whether two rear tires are underinflated. If so, inflate the tyre as needed to troubleshoot.

Note: If the rear wheel is deflated, check whether the tire is punctured or the valve core is loose.

3.1.9 Joint Pin of Backrest Lock Adjustment Stuck

- If the joint pin of backrest lock adjustment is stuck, press backward the backrest slightly before pulling. See details in Robooter's uploaded adjustment videos.
- If it still doesn't work, replace the hook assembly.

Figure (14)

Heruntergeladen von Gast (IP 216.73.217.22) am 19.10.2026 um 04:20 Uhr · sana.swiss

3.2 Fault Code Troubleshooting and Solutions

Explanation: If the machine doesn't move after starting and voice alert is triggered, red font fault code would show on LCD screen. Please refer to descriptions below to troubleshoot.

3.2.1 Code: 20/21/22/23 - Voice Alert: Joystick Protection - Fault Diagnosis: Joystick Signal Cable Disconnection

Fault: Joystick cable is disconnected.

- Before troubleshooting, check whether the dust cover at the bottom of the joystick is dented. If a dent is found, the dust cover should be smoothed out. During the troubleshooting process, please do not operate the joystick to prevent affecting the accuracy of the troubleshooting results.
- Remove the upper controller and check whether the terminal of the joystick cable is loose. If so, re-plug the joystick cable.
- If the fault code still exists, replace the upper controller.

3.2.2 Code: 24 - Voice Alert: Joystick Protection - Fault Diagnosis: Joystick Non-zero Position Startup

Fault: Joystick was not in zero position when the machine started up.

- When starting the machine, the joystick was accidentally touched. Turn off the machine and restart to troubleshoot.
- The machine starts up without touching the joystick but still reporting an error. Check if there is any dents in the black dust cover at the bottom of the joystick that interferes with the joystick's return to zero position. If so, sort out the concave part of the dust cover. Turn off the machine and restart it to troubleshoot.
- Remove the upper controller and check whether the terminal of the joystick cable is loose. If so, re-plug the joystick cable.
- If the fault code still exists, replace the upper controller.

3.2.3 Code: 40 (Left) /41 (Right) /42 (Left and Right) - Voice Alert: Brake Open - Fault Diagnosis: Motor Brake Switch on

Fault: The motor brake switch is on.

- Check the position of the left or right motor electromagnetic switch (raise up to turn off and press down to turn on the motor electromagnetic brake). If the motor brake switch is on, turn off the switch to troubleshoot.

Heruntergeladen von Gast (IP 216.73.217.22) am 19.10.2026 um 04:20 Uhr · sana.swiss

- If the brake is in closed state, unplug the motor cable and then replug it into the lower controller.
- If the fault code exists after replugging the cables, swap two motors' positions. If the fault code changes, replace the motor.
- If the fault code exists after replacing the motor, replace the lower controller.

3.2.4 Code: 80 - Voice Alert: Driver Protection - Fault Diagnosis: Low Battery Voltage

Fault: The battery voltage is too low.

- Remove the battery and charge it. If it can't be charged, replace the battery.
- If it can be charged fully, install it on the machine and check whether the fault code disappears. If the fault code exists, replace the lower controller.

3.2.5 Code: 81 (Right) /82 (Left) /83 (Left and Right) - Voice Alert: Driver Protection - Fault Diagnosis: Motor Hall Sensor Signal Abnormality

Fault: Motor Hall sensor signal is interrupted.

- Remove the lower controller and check whether the Hall sensor plug is loose or the cable is broken. If so, replace the motor to troubleshoot.
- If the cables are in good condition, swap two motors' positions. If the fault code changes, replace the motor.
- If the fault code exists after replacing the motor, replace the lower controller.

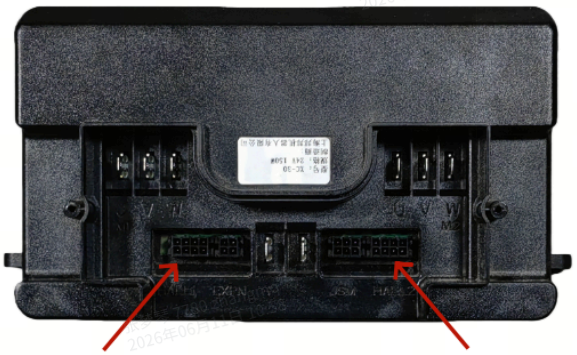

Figure (15)

3.2.6 Code: 84/85/86/87 - Voice Alert: Driver Protection - Fault Diagnosis: MOSFET Short Circuit

Fault: Excessive current in the lower controller caused the MOSFET to fail.

Replace the lower controller.

3.2.7 Code: 88 - Voice Alert: Driver Protection - Fault Diagnosis: Precharge Failure

Heruntergeladen von Gast (IP 216.73.217.22) am 19.10.2026 um 04:20 Uhr · sana.swiss

Replace the lower controller.

3.2.8 Code: 94 (Right) /95 (Left) /96 (Left and Right) - Voice Alert: Driver Protection - Fault Diagnosis: Motor Stall

Fault: The motor is stalled, causing excessive current on one or both sides.

1. Open the motor brake and lift the rear wheels on both sides of the machine.
2. Check whether the rear wheel can rotate. If not, replace the motor.
3. If the rear wheel can rotate, replace the lower controller.

3.2.9 Code: 90 - Voice Alert: Machine Protection - Fault Diagnosis: High Battery Voltage

Fault: The battery voltage is too high.

- Remove the battery and charge it. If it can't be charged, replace the battery.
- If it can be charged fully, install it on the machine and check whether the fault code disappears. If the fault code exists, replace the lower controller.

3.2.10 Code: E1- Voice Alert: Keypad Failure - Fault Diagnosis: Invalid Upper Controller Keypad

Fault: A button on the upper controller is stuck and continuously transmits a signal for more than 60 seconds.

Check whether the function button of the upper controller is stuck and does not rebound after pressing. If so, dial the button to make it rebound. If it cannot rebound, replace the upper controller.

3.2.11 Code: E6 - Voice Alert: Machine Protection - Fault Diagnosis: Communication between the Upper and Lower Controller Failure

Fault: Communication between the upper and lower controllers is interrupted.

- Remove the battery from the machine for ten seconds, then install the battery on the machine. Restart the machine. If the fault code exists, visually check the folding position of the machine to see whether there are wear or obvious extrusion marks on the upper and lower controller connection cable. If so, replace the upper and lower controller connection cable.
- If the upper and lower controller connection cable is in good condition, check whether the armrest light can be turned on and off normally. If not, remove the armrest light and restart the machine. If the fault code is eliminated, replace the armrest light.

Heruntergeladen von Gast (IP 216.73.217.22) am 19.10.2026 um 04:20 Uhr · sana.swiss

- If the armrest light can be turned on and off normally, remove the armrest light and install the upper controller in place of the armrest light. If the fault code is eliminated, replace the upper and lower controller connection cable.
- If the upper and lower controller connection cable is replaced and the upper controller takes the place of the armrest light, the fault code still exists, replace the lower controller.
- If the lower controller is replaced and the fault code still exists, replace the upper controller.
- If the upper controller is replaced and the fault code still exists, replace the upper and lower controller connection cable.

3.2.12 Code: E7 - Voice Alert: Machine Protection - Fault Diagnosis: FLASH Memory Failure

Fault: Configuration data in the FLASH memory chip is lost.

- Turn off the machine and restart to troubleshoot.
- If the fault code still exists after restart, replace the upper controller.

IV. Replacement and Repair of Machine Spare Parts

Attention (Important):

1. **During the operation, the battery needs to be removed. Hot-line work is prohibited.**
2. **Disassemble the screws and place them in order to avoid using the wrong screws during installation.**
3. **The missing gasket needs to be complemented.**

4.1 Upper Controller/Armrest Light Removal & Installation

Tools required: 3mm T-shaped hex wrench, cross screwdriver

1. Use a 3mm T-shaped hex wrench to remove the three internal hex fastening screws beneath the armrest (see Figure (16) ①②③).
2. Pull the upper controller or armrest light out of the armrest.

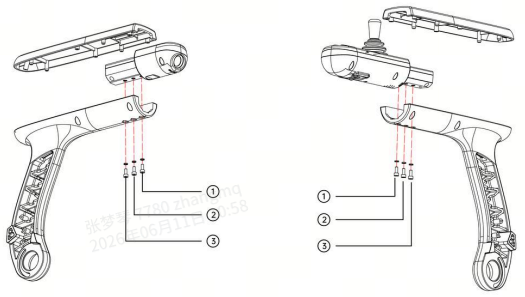

Heruntergeladen von Gast (IP 216.73.217.22) am 19.10.2026 um 04:20 Uhr · sana.swiss

3. Press and hold the upper controller/armrest light terminal buckle switch to remove the plug (see Figure (2) ①)

Figure (16)

Reverse the procedures above to install.

Note: Connect the upper controller/armrest light terminal carefully and correctly to avoid short circuit and smoke.

4.2 Lower Controller Removal & Installation

Tools required: 3mm T-shaped hex wrench, cross screwdriver

1. Use a 3mm T-shaped hex wrench to remove the three internal hex fastening screws used to fix the metal plate (see Figure (17) ①②③).
2. Use a 3mm T-shaped hex wrench to remove the four internal hex fastening screws used to fix the lower controller onto the metal plate (see Figure (17) ④⑤⑥⑦).
3. Use a cross screwdriver to remove the two screws used to fix the lower controller to the rear housing (see Figure (17) ⑧⑨).
4. Use a cross screwdriver to remove the two fixing screws on the metal plate and rear housing to remove the metal plate (see Figure (17) ⑩⑪).
5. Use a cross screwdriver to remove the two fixing screws for the harness cover to remove the harness cover (see Figure (17)⑫⑬).
6. Remove the lower controller connection terminal plug in turn (see Figure (4) ①②③④⑤⑥⑦).

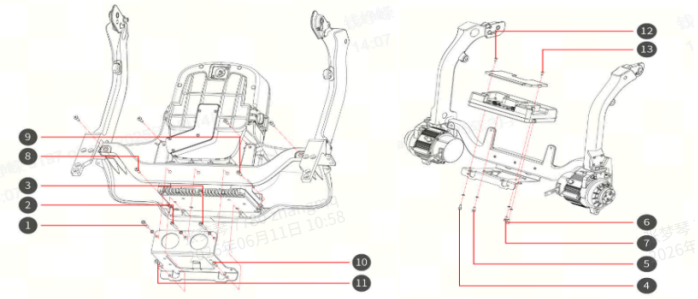

Figure (17)

Reverse the procedures above to install.

Heruntergeladen von Gast (IP 216.73.217.22) am 19.10.2026 um 04:20 Uhr · sana.swiss

4.3 Motor Removal & Installation

Tools required: 3mm T-shaped hex wrench, 4mm T-shaped hex wrench, cross screwdriver, 4 * 150mm cable tie, Loctite 243 thread glue

1. Remove the rear wheel trim cover. See Figure (18) ①).
2. Use a 4mm T-shaped hex wrench to remove the three internal hex fastening screws on the rear wheel (see Figure (18) ②③④). Remove the rear wheel.
3. Lift the machine 90 degrees upward.
4. Use a 3mm T-shaped hex wrench to remove the three internal hex fastening screws used to fix the metal plate and the rear housing (see Figure (17) ①②③).
5. Use a cross screwdriver to remove the two screws used to fix the lower controller to the rear housing (see Figure (17) ⑧⑨).
6. Use a cross screwdriver to remove the two fixing screws on the metal plate and rear housing to remove the metal plate (see Figure (17) ⑩⑪).
7. Use a cross screwdriver to remove the two fixing screws for the harness cover to remove the harness cover (see Figure (17)⑫⑬).
8. Remove the motor phase wire & Hall sensor cable plug from the U\ V\ W\ HALL1\ HALL2 port of the lower controller (M1 left motor phase wire-M2 right motor phase wire HALL1 (left motor Hall sensor cable) \ HALL2 (right motor Hall sensor cable). See Figure (4) ①②③④.
9. Use diagonal pliers to cut the motor cable tie.

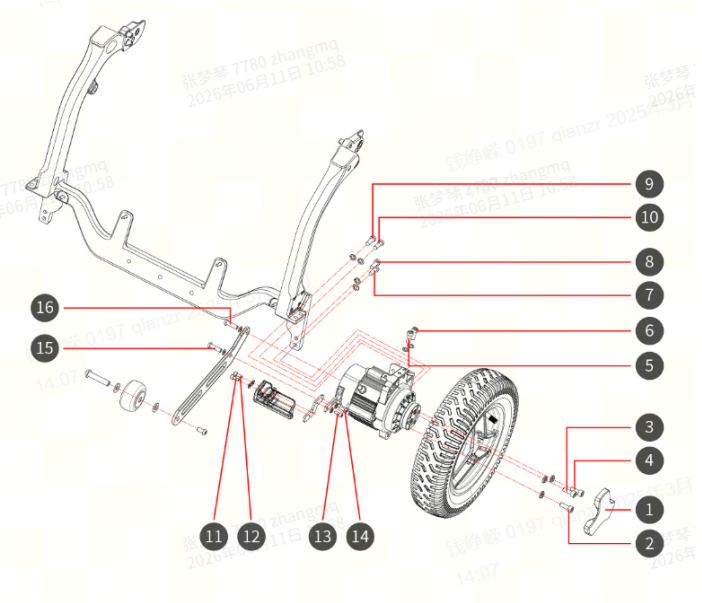

Figure (18)

Heruntergeladen von Gast (IP 216.73.217.22) am 19.10.2026 um 04:20 Uhr · sana.swiss

10. Use a 4mm T-shaped hex wrench to remove the six internal hex fastening screws fixing the motor to remove the motor (see figure (18) ⑤⑥⑦⑧).
11. Use a 3mm T-shaped hex wrench to remove the two internal hex fastening screws on the anti-tip wheel bracket, and take off the anti-tip wheel assembly (See Figure (18) ⑨⑩).

Reverse the procedures above to install.

Note: Drip a drop of Loctite 243 thread glue on the screws when installing the rear wheel (see Figure (18) ②③④) and motor (see Figure (18) ⑤⑥⑦⑧⑨⑩) .

4.4 Bottom Storage Basket Removal & Installation

Tools required: 4mm T-shaped hex wrench

Use a 4mm T-shaped hex wrench to remove the four internal hex screws front and back of the bottom net bag (See Figure (19) ①②③④).

Reverse the procedures above to install.

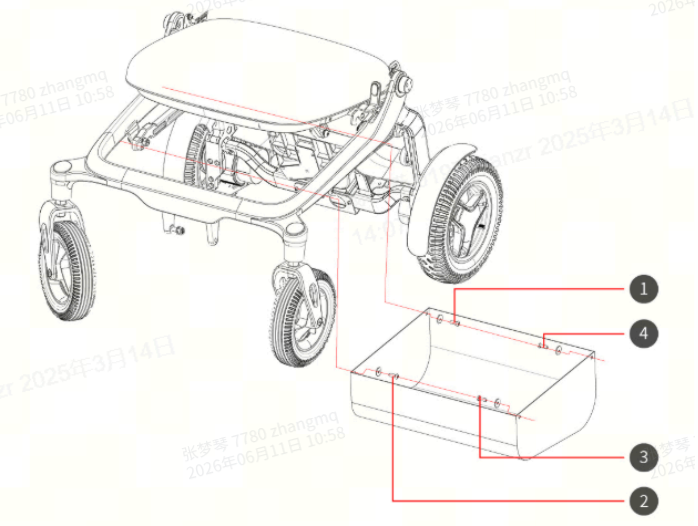

Figure (19)

4.5 Rear Housing & Power Cord Removal & Installation

Tools required: 3mm T-shaped hex wrench, cross screwdriver, diagonal pliers

1. Lift the machine at 90° to the ground (note: Place the machine on a soft cushion to avoid scratches on the backrest).

Heruntergeladen von Gast (IP 216.73.217.22) am 19.10.2026 um 04:20 Uhr · sana.swiss

2. Use a cross screwdriver to remove the four fixing screws at the bottom of the rear housing. See Figure (20) ①②③④.
3. Use a cross screwdriver to remove the two fastening screws on the lower controller and the rear housing. See Figure (17).
4. Use a cross screwdriver to remove the two fastening screws on the lower controller bracket and the rear housing. See Figure (17).
5. Lift the machine flat.
6. Use a 3mm T-shaped hex wrench to remove the two hex fastening screws on the left and right sides of the rear housing to remove the rear housing (See Figure (20) ⑤⑥).
7. Use a cross screwdriver to remove the two fixing screws on the harness cover to remove the harness cover. See Figure (17).
8. Use diagonal pliers to clamp the bottom of the positive and negative plugs of the power cord and take them off (See Figure (4) +/-).
9. Remove the battery indicator light cable plug (see Figure (4) ⑤).
10. Use a cross screwdriver to remove the two fastening screws on the battery compartment power cord plug (see Figure (20) ⑦⑧).
11. Use a cross screwdriver to remove the five fastening screws on the harness cover of the rear housing and take off the harness cover. See Figure (20)⑨⑩⑪⑫⑬.
12. Remove the power cord.

Reverse the procedures above to install.

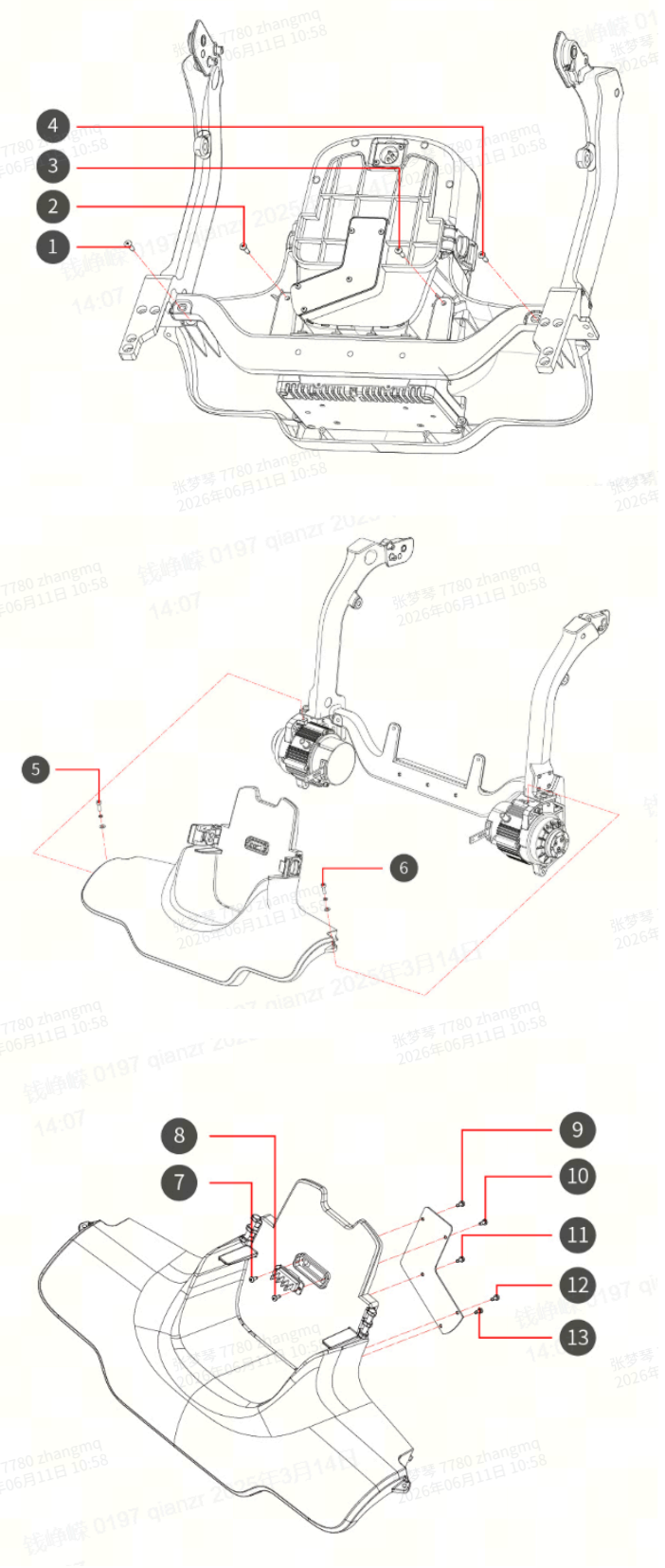

Figure (20)

Heruntergeladen von Gast (IP 216.73.217.22) am 19.10.2026 um 04:20 Uhr · sana.swiss

4.6 Front Fork Removal & Installation

Tools required: 4mm T-shaped hex wrench / flathead screwdriver / No. 19 socket wrench / No. 19 open-end wrench / Loctite 243 thread glue

1. Use a 4mm hex wrench to remove the fastening screw on the front wheel. See Figure (21) ① .
2. Remove the front wheel. See Figure (21) ②.
3. Use a flathead screwdriver to pry up the rubber trim cover and remove it. See Figure (21) ③ .
4. Use a 19mm open-end wrench to engage with the hex fixing surface ⑤ at the bottom end of the front fork, and a 19mm socket wrench to fit onto the fixing nut ④ of the front fork top rod. Simultaneously loosen the fixing nut of the front fork top rod in a counterclockwise direction, as shown in Figure (21).
5. Remove the front fork.

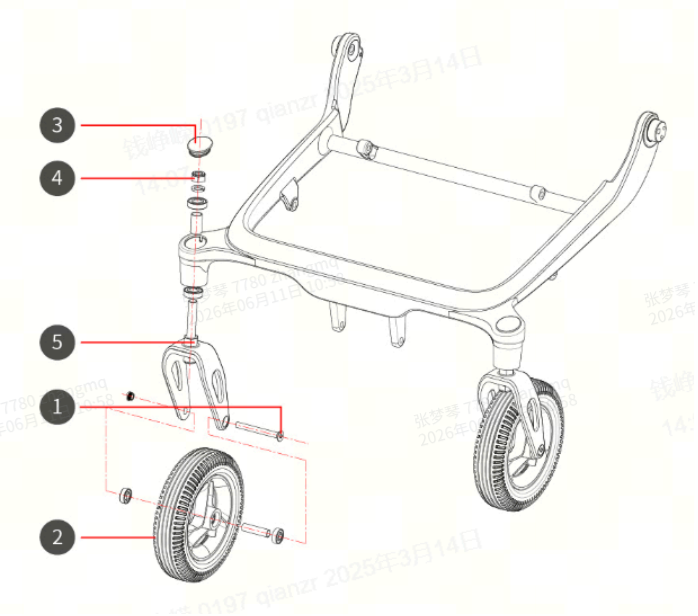

Figure (21)

Reverse the procedures above to install.

Note: Drip a drop of Loctite 243 thread glue on the fixing screw and nut when installing the front fork and the front wheel.

4.7 Backpack Removal & Installation

Tools required: cross screwdriver

1. Unzip the backpack
2. Use a cross screwdriver to remove the four fastening screws on the top and bottom of the backpack, as shown in Figure (22) ①②③④

Heruntergeladen von Gast (IP 216.73.217.22) am 19.10.2026 um 04:20 Uhr · sana.swiss

Reverse the procedures above to install.

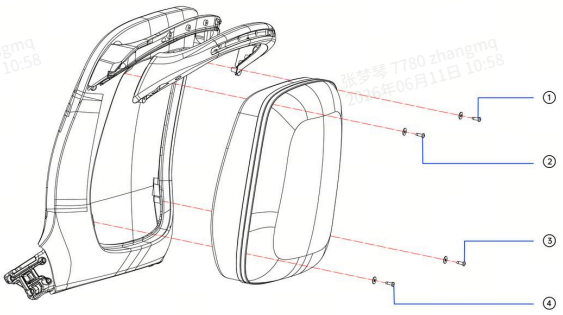

Figure (22)

V. Warranty Policy and Routine Maintenance

5.1 Safety Precautions and Important Warnings

- **Safety First:** Read the "User Manual" carefully before use, maintenance or repair.
- **Regular Inspection:** Conduct a basic safety inspection every three months and a comprehensive professional inspection annually.
- **Professional Operation:** Inspection, repair, and replacement of core components (such as motors, controllers, frames, etc.) must be carried out professionally.
- **Original Parts:** Use original parts provided by Robooter to ensure safety and performance.
- **Modification Risks:** Non-authorized modification is forbidden and violates the warranty policy.

5.2 Warranty Policy

5.2.1 Warranty Period

- Adhere to the warranty period requirement if mentioned in contract.
- 18 months free warranty for complete machine since machine shipped from Robooter, some spare parts take different warranty periods (See details in the After-sales Policy).
- For new parts replaced free of charge during the warranty period, the warranty period of the new parts shall continue for the remaining warranty time.
- For newly purchased parts, the warranty period of the new parts shall be recalculated according to the warranty policy.
- Complimentary parts do not provide warranty service.

5.2.2 Warranty Instructions

Heruntergeladen von Gast (IP 216.73.217.22) am 19.10.2026 um 04:20 Uhr · sana.swiss

- Submit purchase invoices or contract when applying for free warranty.
- For the extended warranty purchased or the extended warranty promised by Robooter, it is necessary to provide a voucher such as invoice, email or contract.

5.2.3 Non-warranty Scope

If any of the following situations occur during the warranty period, Robooter will not provide free warranty services.

1. Unable to provide valid warranty vouchers or product purchase vouchers.
2. Products sold by non-manufacturer-designated distributors or platform flagship stores.
3. Damage caused by misoperation, abuse, or improper transportation, maintenance, or storage.
4. Damage caused by force majeure or accidental events, such as fire, natural disasters, war, terrorist attacks, etc.
5. Damage caused by unauthorized disassembly or modification without the manufacturer's permission.
6. Malfunctions occur after repairs using non-original parts.
7. Malfunctions occur after repairs carried out by personnel unauthorized by the manufacturer.
8. Other non-product quality issues, such as human-caused malfunctions or damages.
9. Natural aging, discoloration, or wear and tear that occurs during the product's use.
10. Free gifts with the machine do not provide warranty services.

5.3 Maintenance of Specific Parts

5.3.1 Front Wheel Maintenance:

Regularly check whether the fastening screws on the front fork and wheels are loose. If looseness is found, apply thread glue and tighten the screws.

5.3.2 Tire Inspection:

a. **Tighten the rear wheel screws**

If the machine is used frequently, it is better to inspect the rear wheels every three months. Use a 3mm hex wrench to carefully tighten the fastening screws of the rear wheels to prevent them from loosening or falling off. Once rust is found on the fastening screws, they must be replaced in time to avoid affecting driving safety.

b. **Tire inflation**

Heruntergeladen von Gast (IP 216.73.217.22) am 19.10.2026 um 04:20 Uhr · sana.swiss

To ensure the normal use of rear inflatable tires, it is recommended to inflate the rear tires once a month. Timely gas replenishment can avoid accelerating tire wear due to air deficiency so as to extend tire service life.

c. **Tire replacement**

Pay attention to the condition of the tires in daily use. If there are bulges, cracks, or severe wear and tear on the tread, the tires should be replaced as soon as possible. Otherwise, it is easy to cause tire blowouts or a significant increase in braking distance due to insufficient grip, which threatens the safety of the user.

5.3.3 Battery Maintenance

5.3.3.1 How to correctly understand the "battery range"?

- The range of an electric wheelchair refers to the maximum continuous driving distance after a single full charge under standard test conditions.
- The test standards are in accordance with relevant national standards, such as: ambient temperature 25±2°C, flat cement road surface, load 75kg, driving at a constant speed of 3.5km/h until the battery voltage drops to the protection threshold.
- The actual range needs to be determined and estimated by the user based on usage conditions.

5.3.3.2 What are the main factors affecting battery life?

- During daily use, the battery life is easily affected by factors such as load (for every additional 10kg, the battery life decreases by approximately 8%), road gradient (for every 5° slope, the battery life decreases by 15%), temperature (when the temperature is between 0°C and 10°C, the battery life is only 60% of that at normal temperature), etc.
- The larger the capacity, the longer the theoretical range. The E models are available with 8AH, 12Ah, 16AH, 20Ah, and 25Ah batteries. Users should select the battery with the appropriate capacity based on their environment and road conditions to meet their usage needs.
- The reduction in range caused by the deterioration of the machine's overall performance status, such as a jammed caster or insufficient rear tire pressure, will increase rolling resistance and energy consumption.

5.3.3.3 Battery Maintenance Principles

1. Appropriate Charge Duration. Keep the battery range at 20%~90%. Avoid long time fully charged or under voltage.
2. Original Charger. Use the original slow charging charger (3A). Reduce fast charging frequency to avoid overheating or aging of the battery.

Heruntergeladen von Gast (IP 216.73.217.22) am 19.10.2026 um 04:20 Uhr · sana.swiss

3. Appropriate Temperature. Ideal charging temperature: 20°C~35°C. Avoid charging instantly after exposure to the sun.
4. Charge Regularly. Keep the battery range at 50%~60% if not using the battery for over a month. Store the battery in a dry environment at 10°C to 30°C and recharge once every one to two months.

5.3.3.4 Remove and Store the Battery Separately

- Even when the wheelchair is turned off, the controller, instrument, Bluetooth module, etc. may still have standby currents in the microampere range. Long-term parking (e.g., 1 month) may slowly drain the battery charge to <10% or even 0%, posing risks such as internal short circuits, BMS lockout, and permanent capacity degradation.
- Wheelchairs are often parked in places such as garages, balconies, and stairwells, and are susceptible to environmental factors such as high temperatures (sun exposure in summer >45°C) and low temperatures (in winter < -10°C) .
- When taken out separately, it can be stored in a dry and thermostatically controlled indoor environment, significantly reducing risks and facilitating regular maintenance.

5.3.3.5. Prolong Battery Range

- **Smooth operation** : Avoid sudden acceleration or braking. Driving at a constant speed can reduce energy consumption by more than 30%.
- **Load Reduction**: Do not carry unnecessary items.
- **Road Condition Prediction** : Plan your route in advance to avoid steep slopes, as the power consumption when climbing is three times that on flat roads.
- **Tire Pressure Maintenance** : Regularly monitor tire pressure; insufficient tire pressure reduces range by 10%-15%.
- **Spare Battery**: Purchase a spare travelling battery to extend driving distance.

5.3.4 Structure and Connection Inspection

- Inspect the connection parts of the frame regularly. Weekly or monthly inspections should take the frequency of use into account. Key inspection items should be components including screws and nuts. Confirm whether there are any problems such as looseness, detachment, rust, etc. Once found, replace or tighten them in time to ensure the overall stability of the machine structure.
- Inspect the folding parts regularly to see if there are any abnormal conditions such as jamming or falling off. If any problems are found, the corresponding parts should be repaired or replaced immediately to ensure the normal folding function and safe use of the machine.

Heruntergeladen von Gast (IP 216.73.217.22) am 19.10.2026 um 04:20 Uhr · sana.swiss

5.4 Special Weather Protection

a. **Humid weather**

If encountering rainy or other humid weather, the machine should be wiped clean with a clean cloth as soon as possible after use to avoid it from getting damp and rusting, which will affect the machine's performance and lifespan.

b. **Hot weather**

Do not expose the machine to the sun for a long time in hot weather, as high temperatures may damage the material, electronic components, and batteries of the machine.

Note:

1. **Do not overuse spray cleaning agent to prevent electronic components from getting damp thus causing damage.**
2. **If rust is found on the screw, use WD-40 rust removal lubricant for cleaning. This lubricant can effectively remove rust and lubricate, as well as keep the screw in good condition.**
3. **For tire cleaning, cleaning agents should be sprayed as needed. Do not forget to use a clean dry towel to carefully wipe the residual cleaning agent on the tire surface to prevent the tire from slipping or increasing the braking distance.**

Heruntergeladen von Gast (IP 216.73.217.22) am 19.10.2026 um 04:20 Uhr · sana.swiss

张梦琴 7780 zhangmq 2026年06月11日 10:58

Heruntergeladen von Gast (IP 216.73.217.22) am 19.10.2026 um 04:20 Uhr · sana.swiss